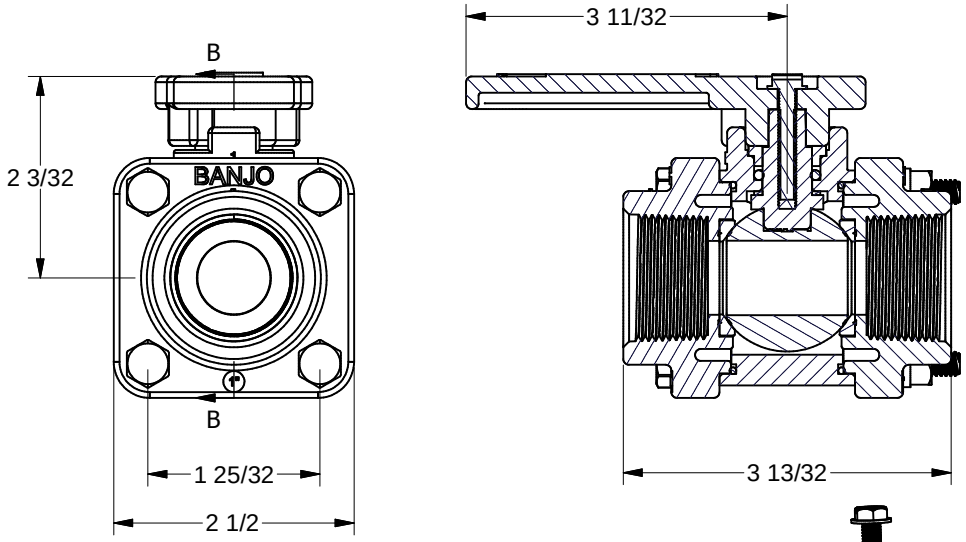

Parts List			
ITEM	QTY	PART NUMBER	DESCRIPTION
1	1	V07254	VALVE BODY
2	2	V07256	1" ENDPLATE
3	4	V07018	1/4" LOCKWASHER
4	4	V07019	1/4-20 HEX NUT
5	1	V07060	THRUST BEARING
6	1	V07159	TEFLON BUSHING
7	1	V07163	2-112 O-RING FKM
8	2	V07258A	3" FP Ball Seat
9	2	V07264	#032 O-RING, FKM
10	4	V07017	1/4-20 X 3" HHCS
11	1	V07151A	STEM
12	1	V10020A	10-32 X 1 1/4" SMS
13	1	V10153A	HANDLE
14	1	V07155	VALVE BALL

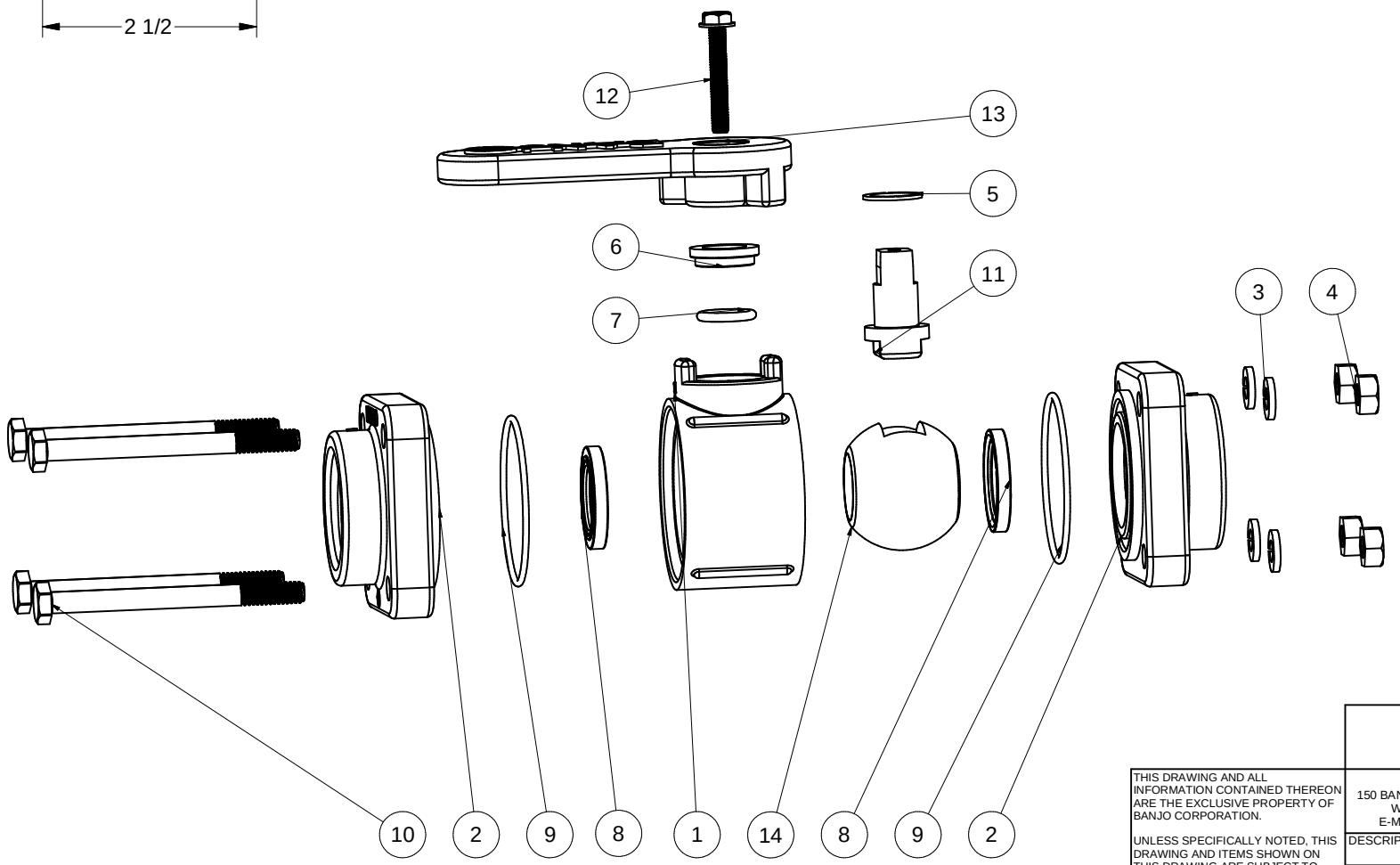

THIS DRAWING AND ALL INFORMATION CONTAINED THEREON ARE THE EXCLUSIVE PROPERTY OF BANJO CORPORATION.

UNLESS SPECIFICALLY NOTED, THIS DRAWING AND ITEMS SHOWN ON THIS DRAWING ARE SUBJECT TO CHANGE AT ANY TIME.

BANJO CORPORATION
150 BANJO DRIVE, CRAWFORDSVILLE, IN 47933
WEB SITE: WWW.BANJOCORP.COM
E-MAIL: BANJOSALES@IDEXCORP.COM

DESCRIPTION
1" BALL VALVE, FKM

PART NUMBER
V100